Pobrano z mamadecor.pl

INSTALLATION MANUAL

38161A

LED BUILT IN | UGR19 | 90 CRI | CE EAC UKCA RoHS COMPLIANT | NOT DIMMABLE

230V | SMD 2835 | 50W | IP20 | Aluminium

Complete with 1250mA driver / Can be connected in line.
Optional suspension kit 050170.

one LIGHT

A SURFACE INSTALLATION

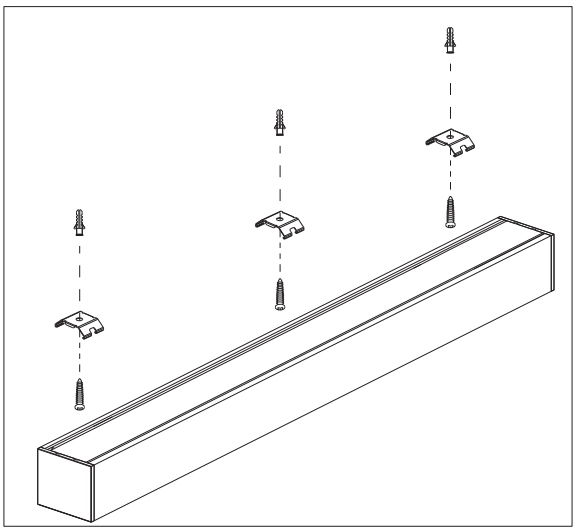

B SUSPENDED INSTALLATION

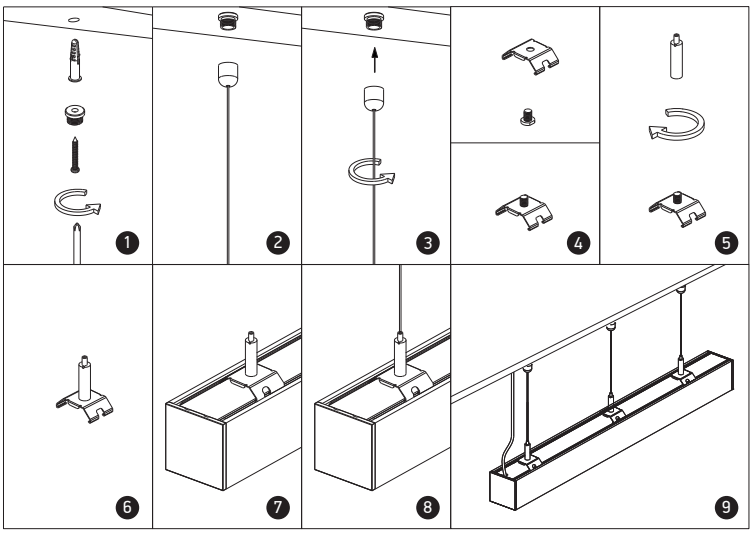

C CONNECTION

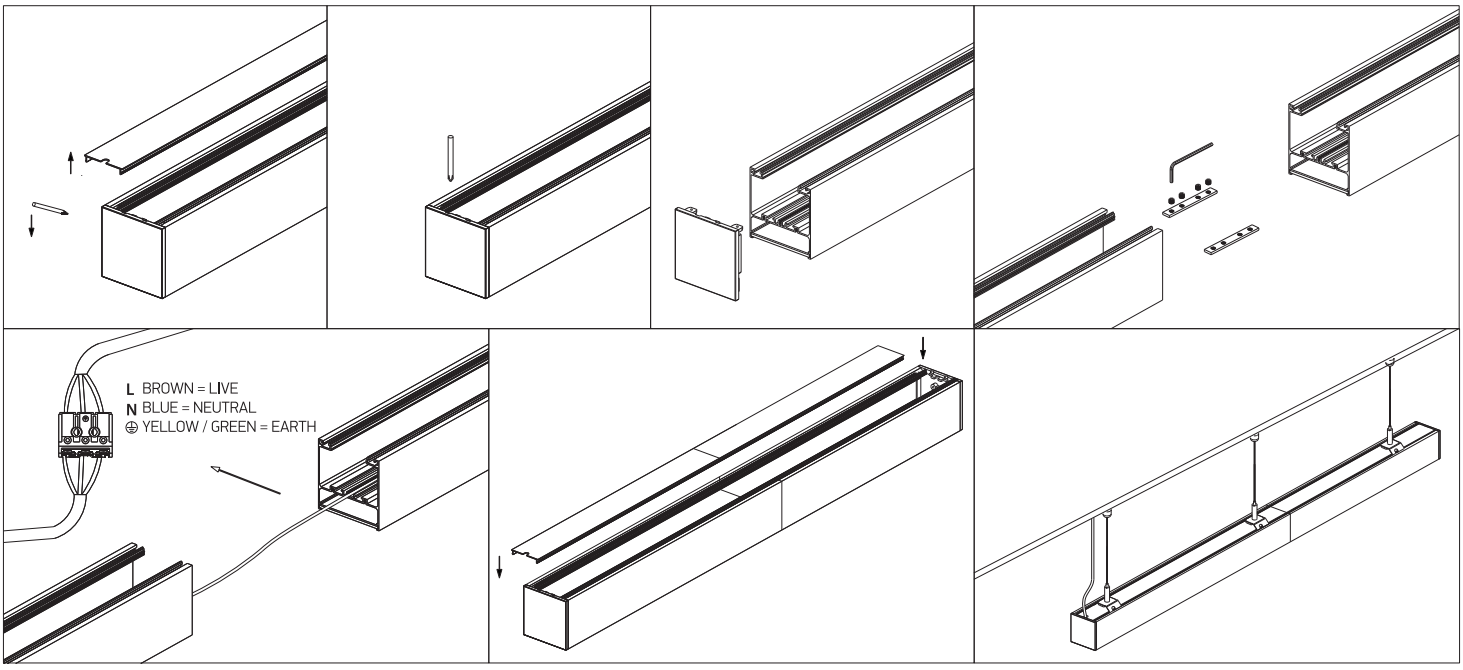

Warnings:

1. Make sure that the product is installed properly before connecting to electricity.
2. Do not cover the fitting.
3. Maintenance and installation should only be carried out by a professional electrician.

www.1-light.eu